THE INFORMATION CONTAINED IN THIS DOCUMENT IS PROPRIETARY TO Y-S ELECTRONIC, ANY REPORDUCTION IN PART OR WHOLE WITHOUT PRIOR WRITTEN APPROVAL OR AUTHORIZATION OF Y-S ELECTRONIC IS STRICTLY PROHIBITED.

REV.	DESCRIPTION	ECN NO.	DWN.	CHK.	APVD.	DATE
A			Xie	Fan	Zhou	2018-06-22

RoHS COMPLIANT

NOTES:
1.MATERIAL: Brass,T=0.20mm
Electrical
Contact Resistance : 20 milliohms
Current Rating : 3 AMP
Volatge Rating : 250 VAC/rms 60Hz
Contact for AWG 24-26

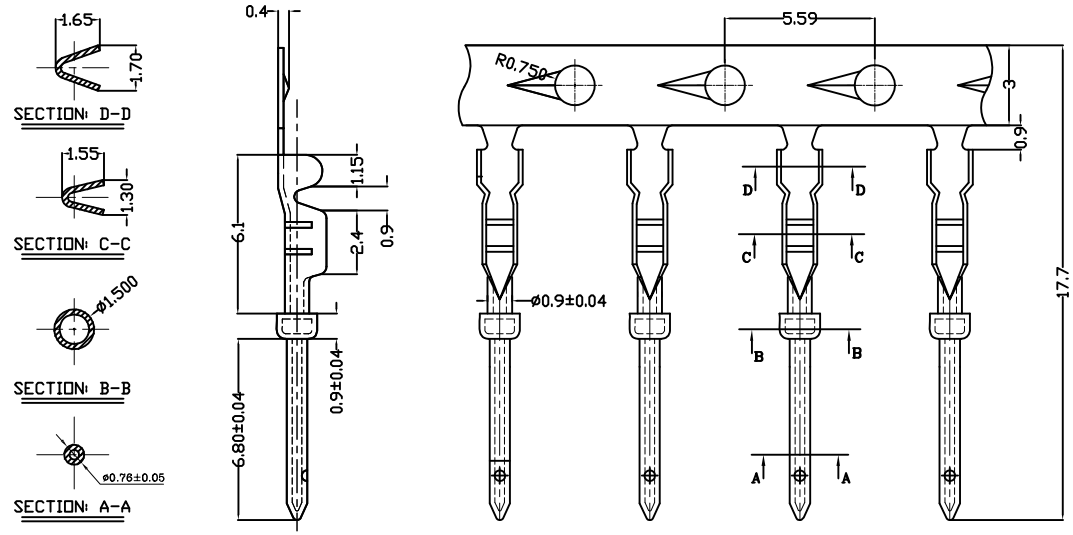

106 SERIES CRIMP TERMINAL

Ordering Information

106 — □ □ □ □

Series No:
Contact Type:
1:Male 3:Male(phosphor bronze)
2:Female 4:Female(phosphor bronze)
Contact Plating:
1:Unplated
2:1u" Selective Gold 4:15u" Selective Gold
3:30u" Selective Gold 5:5u" Selective Gold
6:2.5 μ" min gold over 12 μ" Pd-Ni
7:2.5 μ" min gold over 28 μ" Pd-Ni
Going-up Direction:
L:left hand Going-up Direction
R:right hand Going-up Direction
Package：
1.5K/Per Reel 3.1K/PE BAG 5.500/REEL
2.10K/Per Reel 4.500/BOX

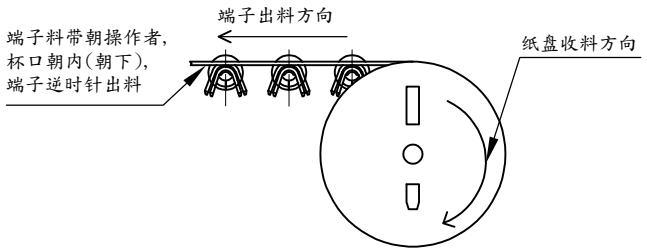

counterclockwise(left hand feed) winding

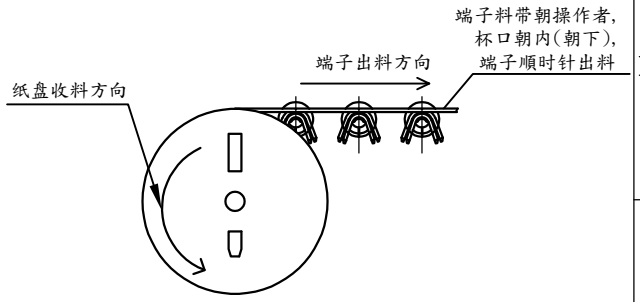

clockwise (right hand feed)winding

DO NOT SCALE DRAWING

DIMENSIONS: ☐ mm [INCH] ☐ INCH [mm] ☒ mm ONLY	CAD GENERATED DRAWING, DO NOT MANUALLY UPDATE	Y-S ELECTRONIC CO., LTD.
	DRAWN BY AND DATE Xie 2015-07-22	
UNLESS OTHERWISE SPECIFIED, GENERAL TOLERANCE: DECIMALS .X ±0.15 [0.006] .XX ±0.08 [0.003] .XXX ±0.03 [0.001] ANGLES X° ±3° .X° ±1.0°	CHECKED BY AND DATE Long 2015-07-22	TITLE TERMINAL:CRIMP OD:0.76MM Male
	APPROVED BY AND DATE Zhou 2015-07-22	
MATERIAL:	THIRD ANGLE PROJECTION	DRAWING NO. 106-1XXX REV A
FINISH:	SCALE: 1 : 1 SIZE: A4	FILE NO.: SHEET 1 OF 1